APPLICATION BRIEF - 116/0917

INDUSTRY: CHEMICAL MANUFACTURING

PRODUCT: 1/2" DOUBLE BLOCK & BLEED FIRESAFE

MEDIA: CORROSIVE GASES

IMI PBM Solution:

Existing process system has corrosive gases at various levels in the column. Client needs instrument interface capability and upgraded safety of double positive isolation in Hastelloy 276. Existing flanges on column are 2" 150#RF but reduced porting for the instrument readings is satisfactory. Changing / cutting vessel ports is, as always, undesirable for cost, recertification, downtime, etc. IMI PBM provides effectively a standard IM DBB valve mounted to simple custom flange interface."

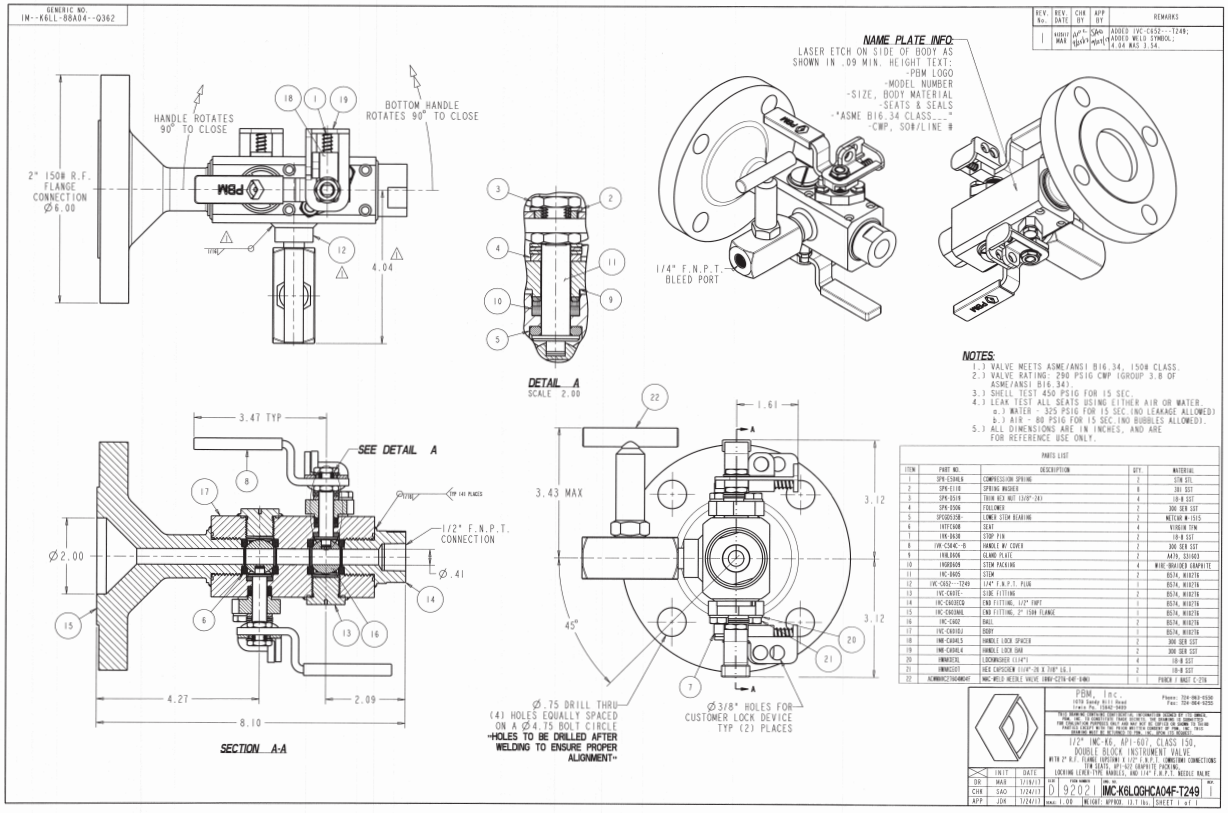

IMI PBM • 1070 SANDY HILL ROAD • IRWIN • PA • 15642 • USA

PBMVALVE.COM • 1.800.967.4PBM • INFO.PBMVALVE@IMI-CRITICAL.COM