APPLICATION BRIEF - 30/0106

INDUSTRY: CHEMICAL

PRODUCT: PIGGABLE 3-WAY VALVE

MEDIA: AUTOMOTIVE PAINT

IMI PBM Solution:

A major automotive manufacturer required ½ inch 3-way piggable valves for use in a robotic paint spraying system. IMI PBM custom designed and fabricated True Bore® 3-way cavity-free valves with 120° turning radius that easily allowed the pig (for cleaning the line) to pass through the valve. These valves, powered by an electric motor operator, increased productivity and reliability by allowing the manufacturer's robotic paint sprayer to clean and switch colors at a faster rate. Innovation – it's what IMI PBM is all about!

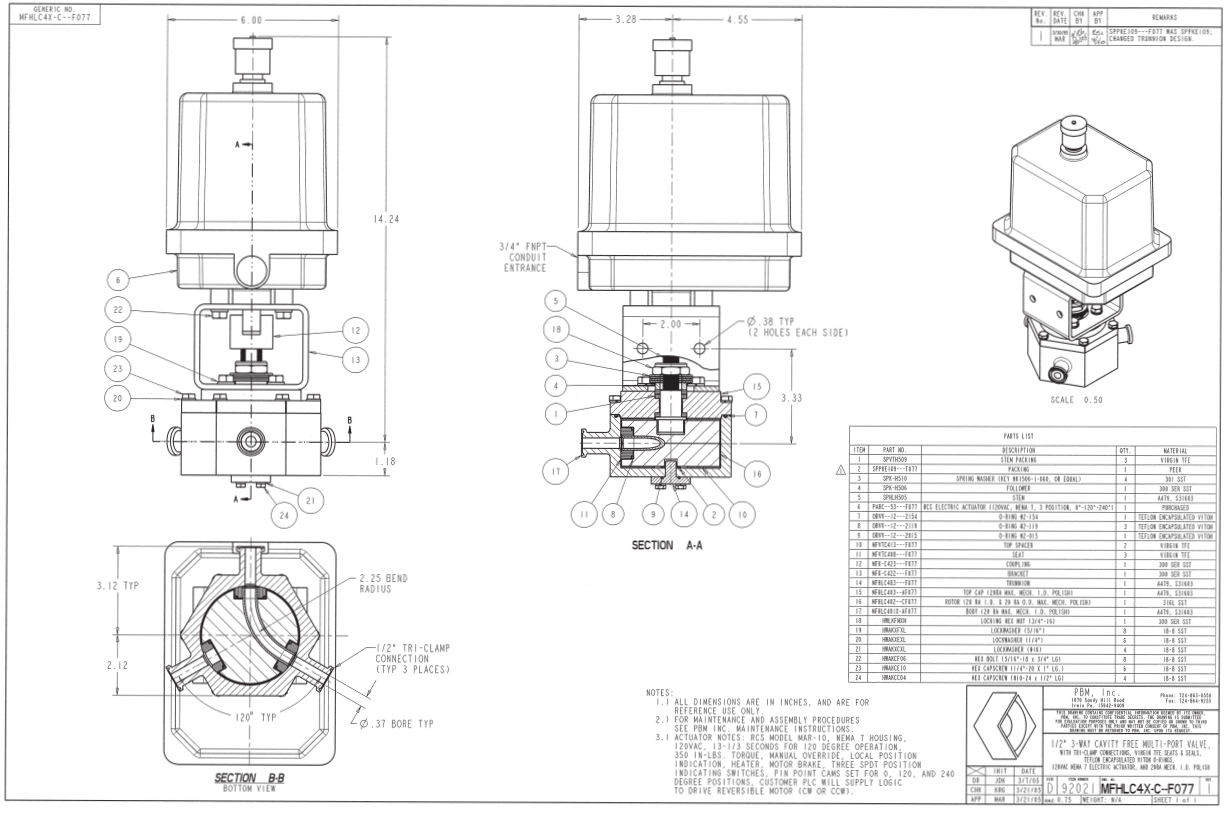

IMI PBM • 1070 SANDY HILL ROAD • IRWIN • PA • 15642 • USA

PBMVALVE.COM • 1.800.967.4PBM • INFO.PBMVALVE@IMI-CRITICAL.COM