APPLICATION BRIEF - 39/0908

INDUSTRY: CHEMICAL

PRODUCT: SAMPLING ROOT VALVE WITH PROBE

MEDIA: DRY CHLORINE SERVICE

IMI PBM Solution:

A leading North American manufacturer of polyvinyl chloride (PVC) resins, chlorine and caustic soda was replacing a competitive valve with a IMI PBM monel root valve needed for dry chlorine service at less than 100 psi. The root valve is a sampling valve that isolates the process from the analyzer station. When the root valve is opened, the dry chlorine in the process line enters the probe, feeds through the valve down the sampling line to the analyzer. After the anaylzer is finished, they shut off the root valve, and open a nitrogen purge line at the analyzer which purges the dry chlorine back through the sampling line into the valve and out the bleed. The third port on the valve is plugged.

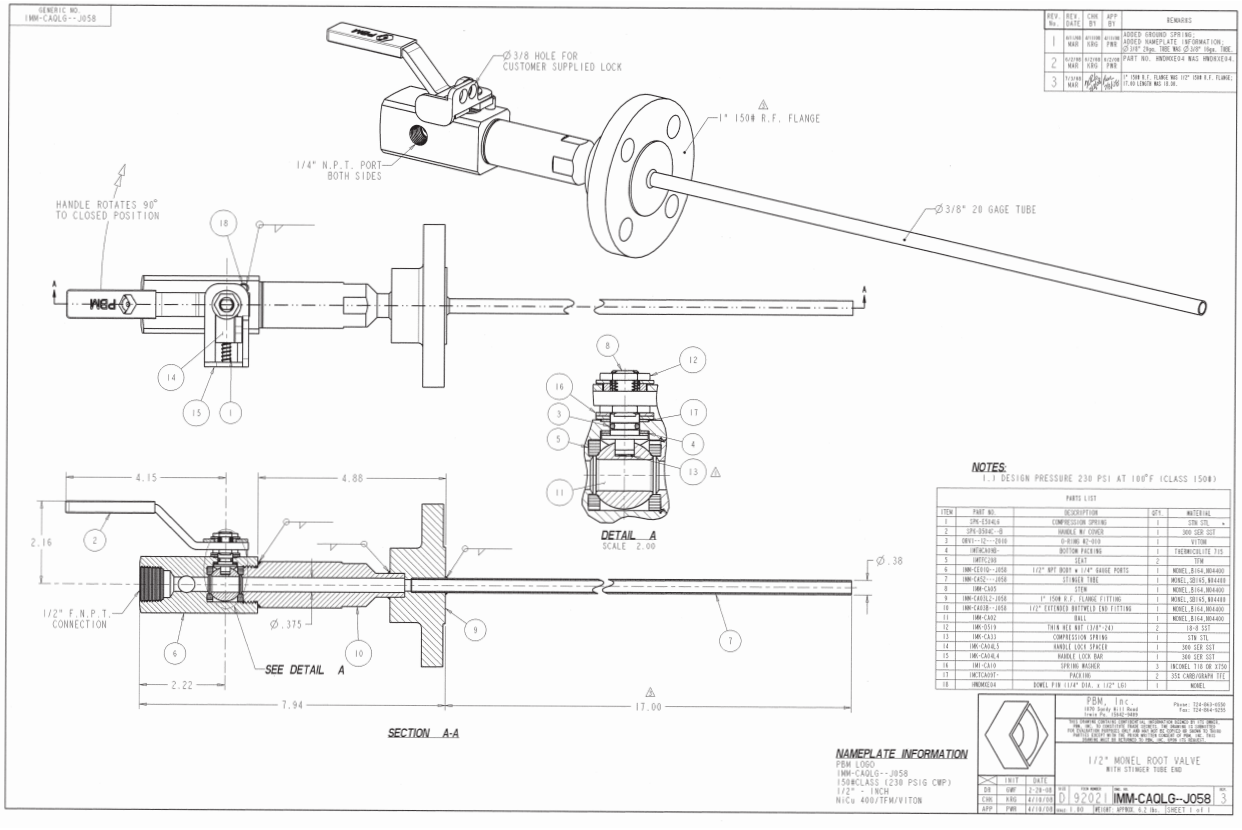

IMI PBM • 1070 SANDY HILL ROAD • IRWIN • PA • 15642 • USA
PBMVALVE.COM • 1.800.967.4PBM • INFO.PBMVALVE@IMI-CRITICAL.COM