# APPLICATION BRIEF - 40/0908

**INDUSTRY:** CHEMICAL

**PRODUCT:** 2”, 316L STAINLESS, SERIES 5 FLUSH TANK BALL VALVE, WITH A 90 DEGREE TRI-CLAMP OUTLET, TFM® SEATS & SEALS, WITH A SPECIAL HANDLE TO ACCOMMODATE CUSTOMER’S REACH ROD

**MEDIA:** PAINT

## IMI PBM Solution:

Customer was currently using a mixture of PBM Series valves along with some Apollo valves. New 500 gallon tote tanks were being proposed and PBM was the valve of interest. In working with the Plant Engineer, we were able to come up with a design that made the handle operation easier and outfitted the outlet with a 90 degree Tri-Clamp to allow hose hook-up without various adapters.

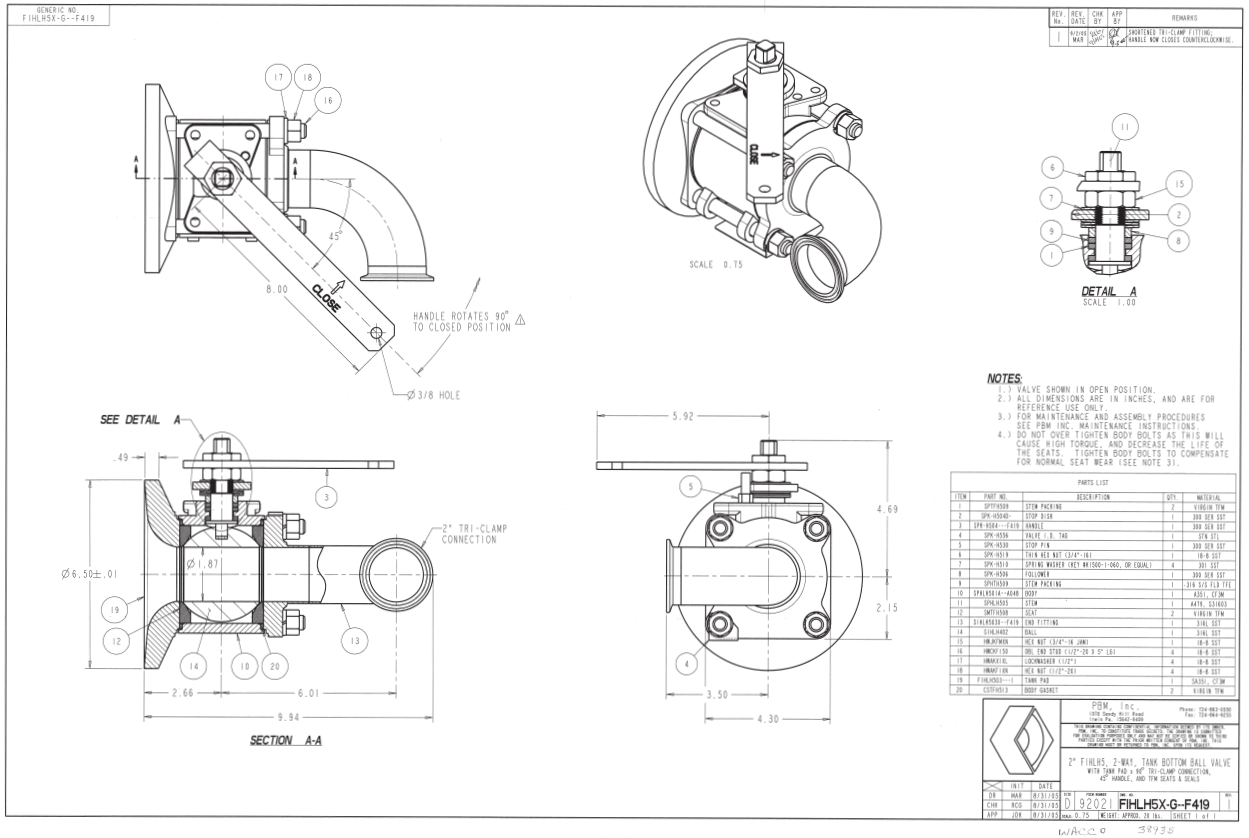


IMI PBM

1070 SANDY HILL ROAD, IRWIN, PA 15642 USA
1-800-967-4PBM
WWW.PBMVALVE.COM
INFO.PBMVALVE@IMI-CRITICAL.COM

IMI Critical Engineering