APPLICATION BRIEF - 40/0908

INDUSTRY: CHEMICAL

PRODUCT: 2", 316L STAINLESS, SERIES 5 FLUSH TANK BALL VALVE, WITH A 90 DEGREE TRI-CLAMP OUTLET, TFM® SEATS & SEALS, WITH A SPECIAL HANDLE TO ACCOMMODATE CUSTOMER'S REACH ROD

MEDIA: PAINT

IMI PBM Solution:
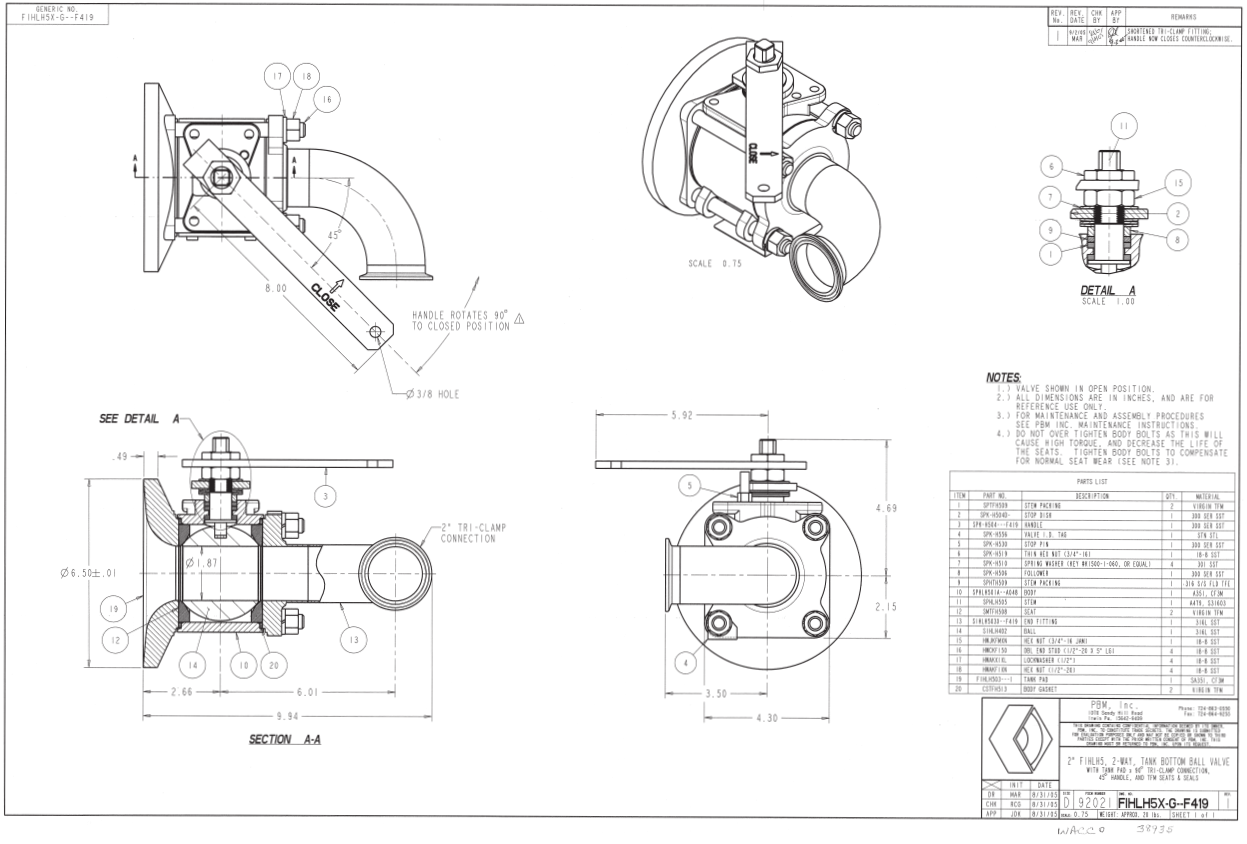
Customer was currently using a mixture of IMI PBM Series valves along with some Apollo valves. New 500 gallon tote tanks were being proposed and IMI PBM was the valve of interest. In working with the Plant Engineer, we were able to come up with a design that made the handle operation easier and outfitted the outlet with a 90° Tri-Clamp to allow hose hook-up without various adapters.