APPLICATION BRIEF - 60/0111

INDUSTRY: CHEMICAL

PRODUCT: PBM TWO WAY FIRE-RATED VALVE

MEDIA: HOT OIL-BASED LIQUID

IMI PBM Solution:

The jacket on an existing reactor made it impossible to use a flush-mounted tank bottom valve. PBM was asked to supply a valve with a nitrogen purge port to introduce a hot oil-based liquid into the reactor. The process, which occurs under vacuum, utilizes this unique PBM valve that eliminates leak paths and potential contamination while improving safety. This PBM valve replaced three 3” process valves and one 3/4” nitrogen valve on a “T” assembly, thus simplifying the process piping.

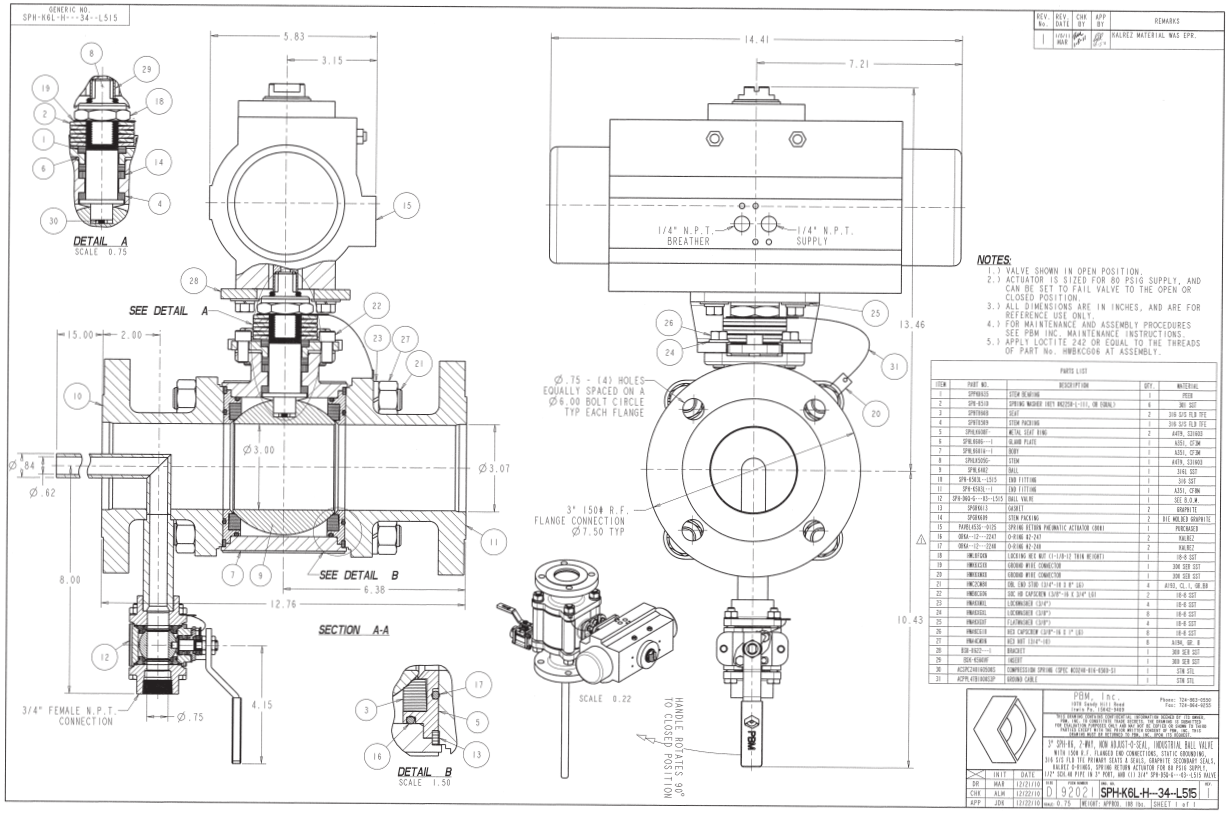

IMI PBM

1070 SANDY HILL ROAD, IRWIN, PA 15642 USA
1-800-967-4PBM
WWW.PBMVALVE.COM
INFO.PBMVALVE@IMI-CRITICAL.COM

IMI Critical Engineering