APPLICATION BRIEF - 25/0805

INDUSTRY: CONSUMER PRODUCTS

PRODUCT: SANITARY IGENIX™ FIRE-RATED 2-WAY WITH SELF-FLUSHING BALL

MEDIA: HAND SANITIZER

IMI PBM Solution:
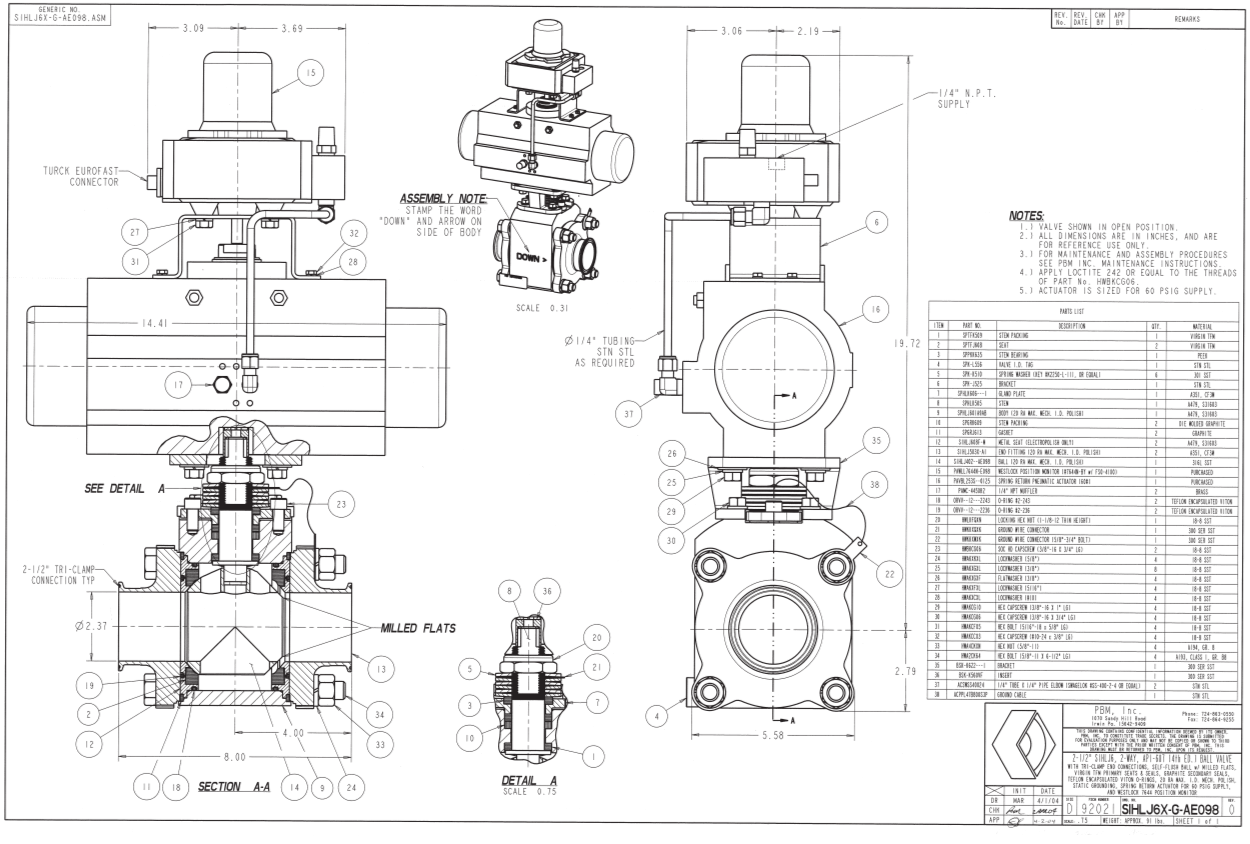
A major US manufacturer of hand cleaners required a sanitary fire-rated ball valve for use on a hand sanitizer process line.The hand sanitizer, made in a sanitary process system, is alcohol based, thus the requirement for both a sanitary and fire-rated valve. In addition, the manufacturer runs multiple products through the same process line and required the lines and valves to be cleaned between batches. IMI PBM's Self-Flushing Ball allows the valve internals to be thoroughly cleaned with line flushes between batches.