APPLICATION BRIEF - 41/0908

INDUSTRY: CONSUMER PRODCUTS

PRODUCT: 2”, 316L STAINLESS, SERIES 9 FLUSH TANK BALL VALVE, WITH AN ADAPTER PAD TO BOLT UP TO A LEE TANK PAD, TRI-CLAMP OUTLET, TFM® SEATS,SEALS AND BODY CAVITY FILLERS,HANDLE MARKED WITH FLOW DIRECTION ARROW.

MEDIA: COSMETICS

IMI PBM Solution:

Customer was having safety concerns with current tank valves. Handle orientation was confusing and operator had trouble identifying whether valve was open or closed. Also, valves were of various sizes and would require additional adapters to hook outlet hoses. PBM offered to standardize on all valves using a 2” valve with a common outlet. Handles were marked with a flow direction arrow. They also had several tanks with Acme Bevel outlets. PBM was able to adapt the same valve series to those allowing the same repair kit for all valves.

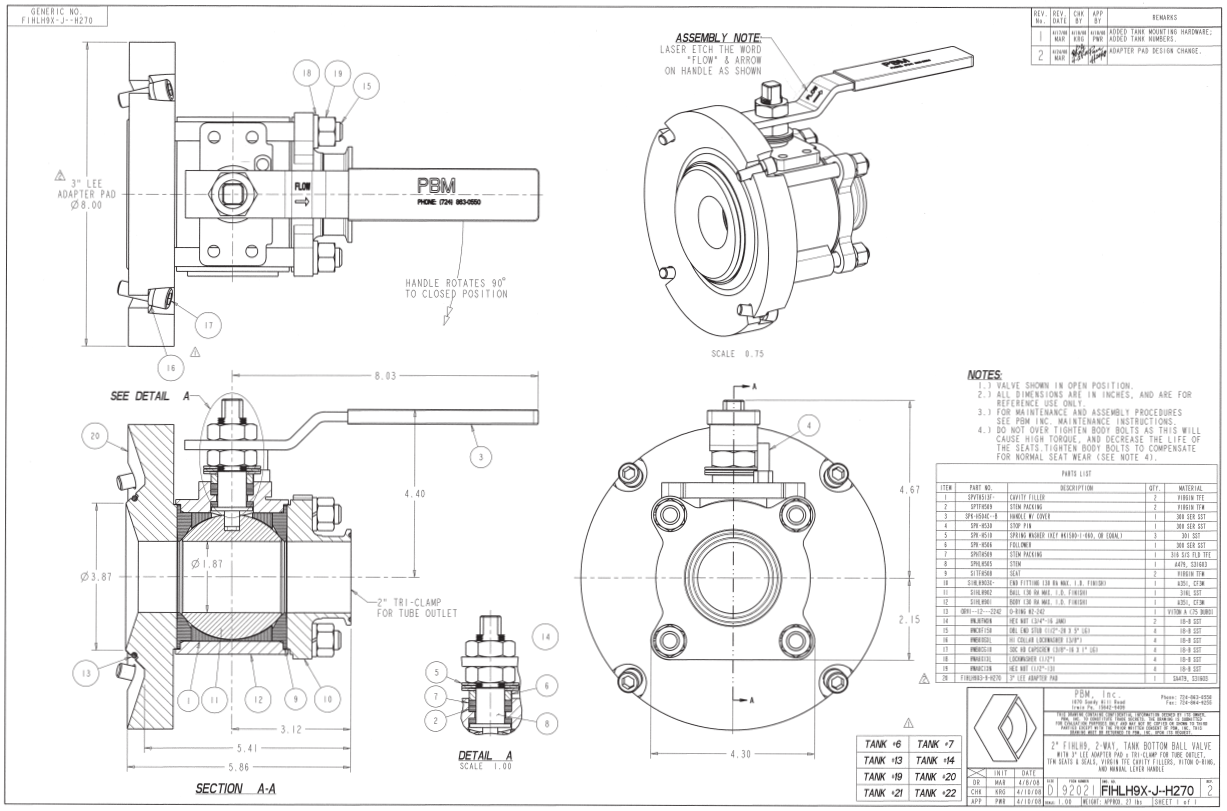

IMI PBM

1070 SANDY HILL ROAD, IRWIN, PA 15642 USA
1-800-967-4PBM
WWW.PBMVALVE.COM
INFO.PBMVALVE@IMI-CRITICAL.COM

IMI Critical Engineering