APPLICATION BRIEF - 50/0610

INDUSTRY: CONSUMER PRODUCTS

PRODUCT: SANITARY SELF-FLUSHING VALVE

MEDIA: LIP BALM, HAND CREME, TOOTHPASTE, AND MANY OTHER PRODUCTS

IMI PBM Solution:

These valves are being used on the bottom of their fill tanks, used for nearly all of their products. The base ingredient in all of their formulas is beeswax. They add various oils, fragrances, and other items to make lip balm, hand creme, toothpaste, and many other products.This specific application came from using one of these fill tanks for a lip balm product called “Shimmer”, that includes ground mica! This was extremely difficult to clean from the existing Sharpe tank bottom valve. When the mica turned up in a batch of the next product filled into this particular kettle, a hand creme, the batch had to be scrapped. The self-flushing valve performed quite well. With the mica product, NEARLY all of the remnants were cleaned from the valve. When the valve was tested with non-mica products, the valves came completely clean, unlike that of the competitor. This customer looks forward to getting these installed onto the kettles.

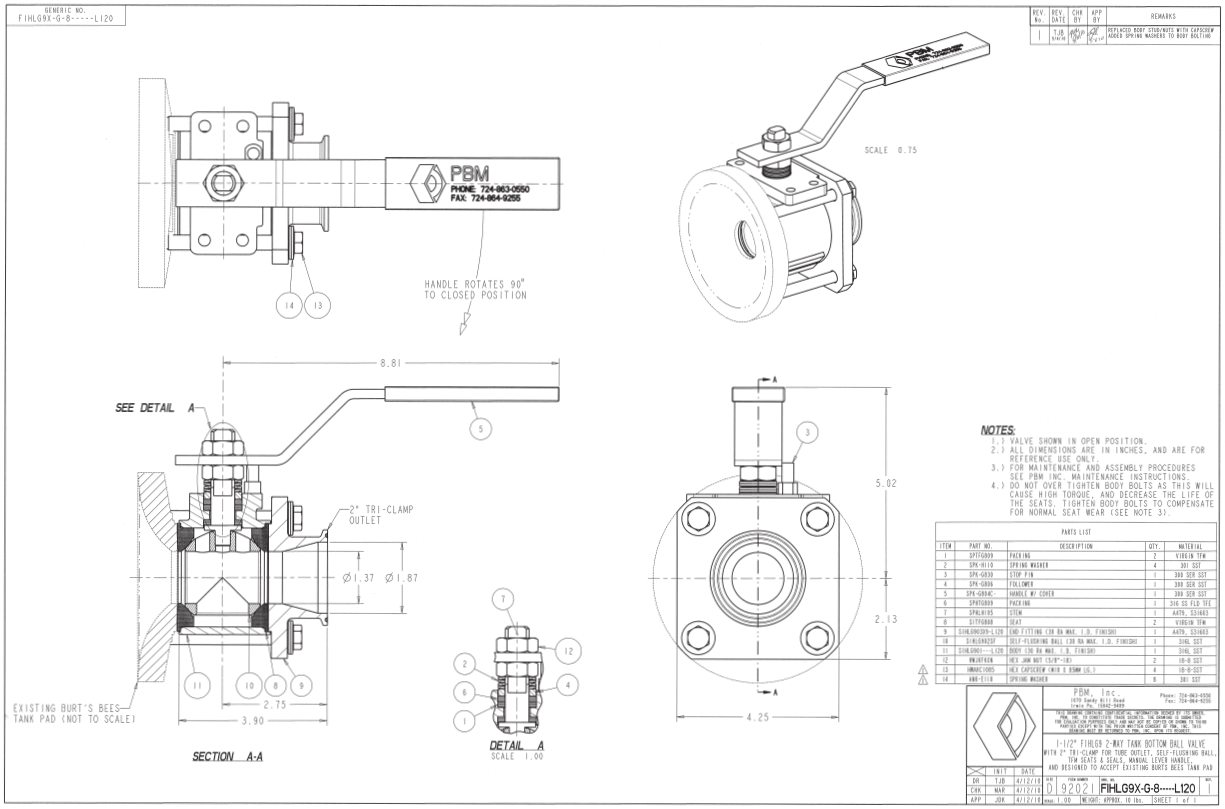

IMI PBM

1070 SANDY HILL ROAD, IRWIN, PA 15642 USA
1-800-967-4PBM
WWW.PBMVALVE.COM
INFO.PBMVALVE@IMI-CRITICAL.COM

IMI Critical Engineering