# APPLICATION BRIEF - 89/1211

INDUSTRY: CONSUMER PRODUCTS

PRODUCT: IMI PBM MULTI-PORT WITH CAVITY FILLERS

MEDIA: HOT DETERGENT LINES

## IMI PBM Solution:

IMI PBM's adjustable sealing provides bubble-tight isolation from port to port in the process pressure range of vacuum to 150 psig. Optional cavity fillers were used to prohibit the collection of 185°F detergent from collecting and solidifying in the valve cavity.

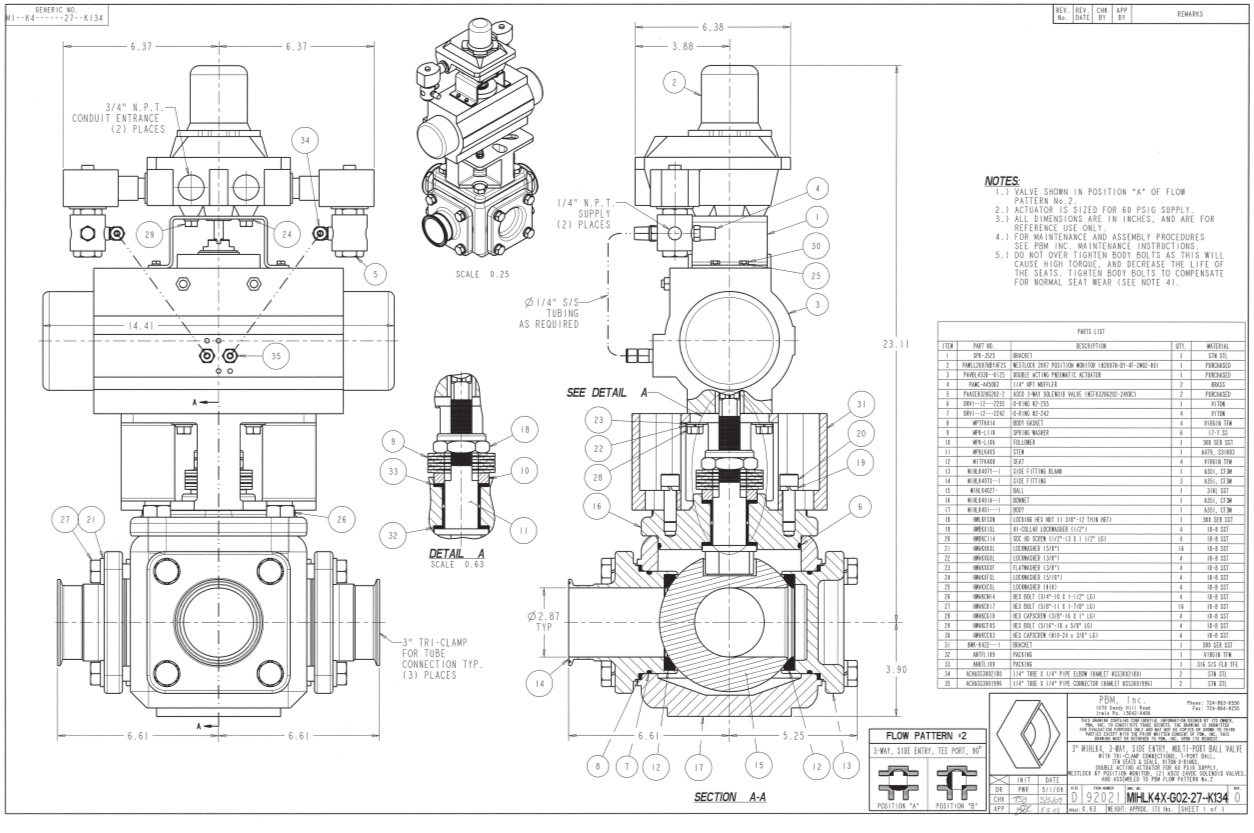



IMI PBM • 1070 SANDY HILL ROAD • IRWIN • PA • 15642 • USA

PBMVALVE.COM • 1.800.967.4PBM • INFO.PBMVALVE@IMI-CRITICAL.COM