APPLICATION BRIEF - 100/0812

INDUSTRY: POWER

PRODUCT: IMI PBM ANSI TRUNNION VALVES

MEDIA: PULVERIZED COAL

IMI PBM Solution:

A major energy producer with an abrasive slurry application tested and specified a valve which allowed for truly laminar flow. IMI PBM True Bore Valves were able to match the ID of the ball, seats and end connection to the appropriate heavy wall piping schedule; ensuring the liquid boundary layer is maintained on the ID of the valve and piping during normally open operations to maximize reliability and minimize internal valve wear when the valve is not actually cycling.

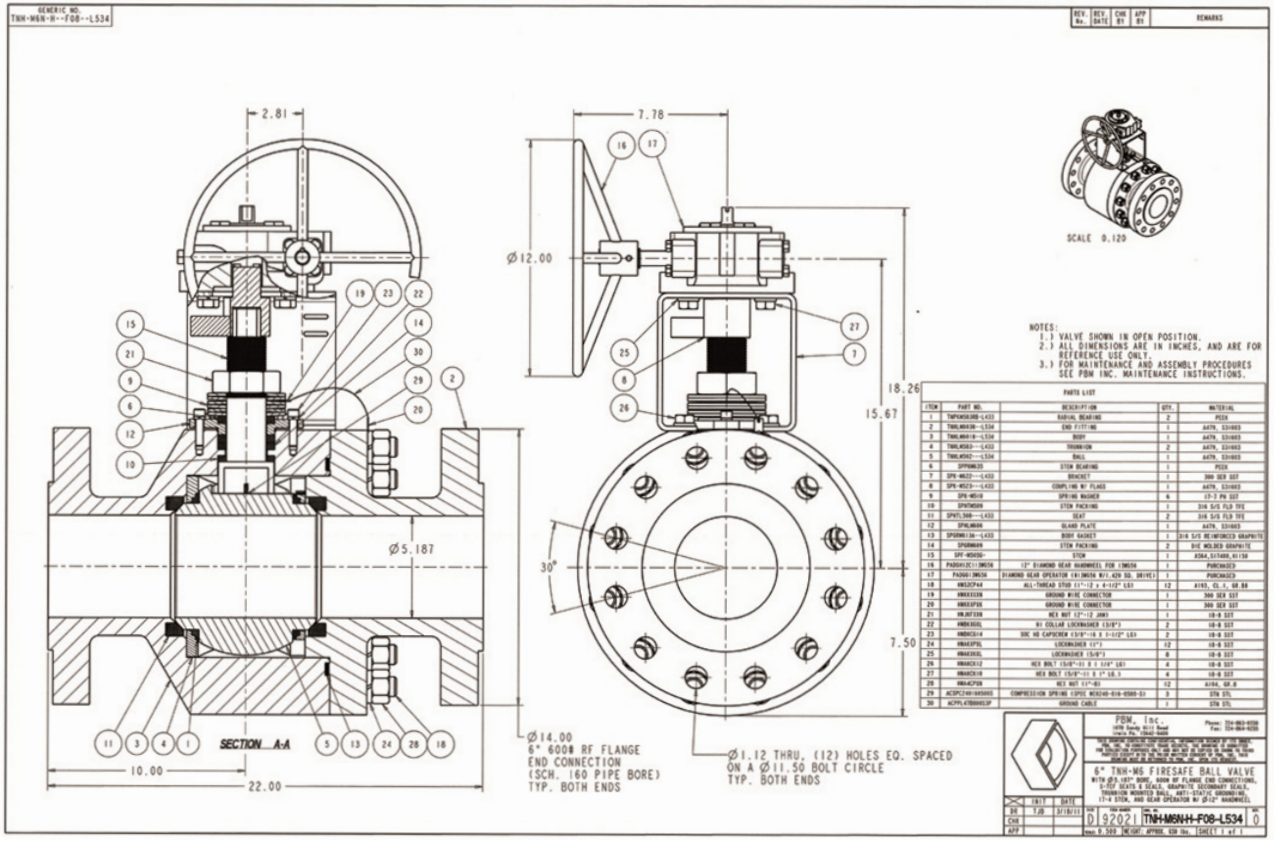

IMI PBM • 1070 SANDY HILL ROAD • IRWIN • PA • 15642 • USA

PBMVALVE.COM • 1.800.967.4PBM • INFO.PBMVALVE@IMI-CRITICAL.COM