APPLICATION BRIEF - 84/1211

INDUSTRY: FOOD & BEVERAGE

PRODUCT: ANSI

MEDIA: STEAM AND WATER FOR MANUFACTURE OF XANTHAN GUM

IMI PBM Solution:

A manufacturer of xanthan gum uses a critical multi-state fermentation process followed by a number of processes to sterilize, remove excess alcohol, and package the final product. IMI PBM has a number of utility valves located in steam and water lines on the seed and batch fermenters. IMI PBM's valve durability and in-line adjustability contributed to a drastic decrease in downtime compared with previously used ball valves.

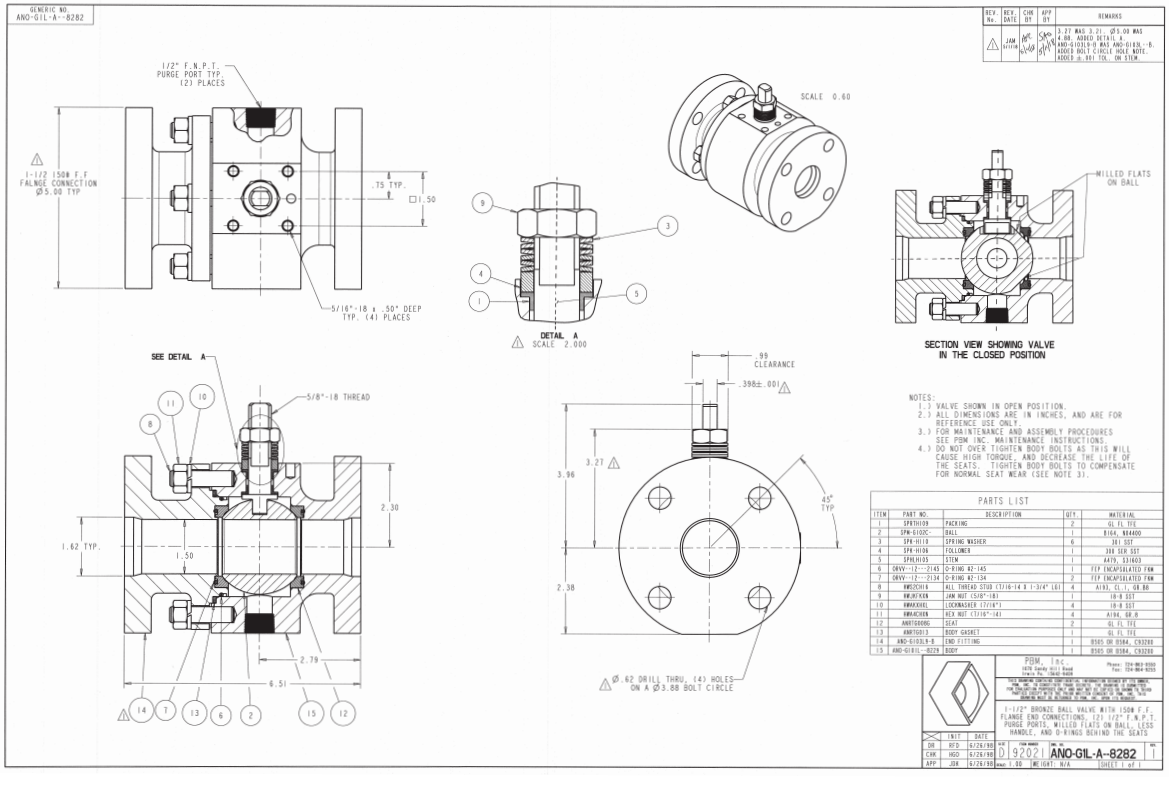

IMI PBM • 1070 SANDY HILL ROAD • IRWIN • PA • 15642 • USA
PBMVALVE.COM • 1.800.967.4PBM • INFO.PBMVALVE@IMI-CRITICAL.COM