APPLICATION BRIEF - 79/1211

INDUSTRY: MARINE & OFFSHORE

PRODUCT: 2-WAY AI-BRONZE

MEDIA: SEAWATER

IMI PBM Solution:

PBM's 2-Way valves were used on an offshore platform at 515 psig and ambient temperature. These valves meet USCG Category A shutoff and can stand up to seawater environments.

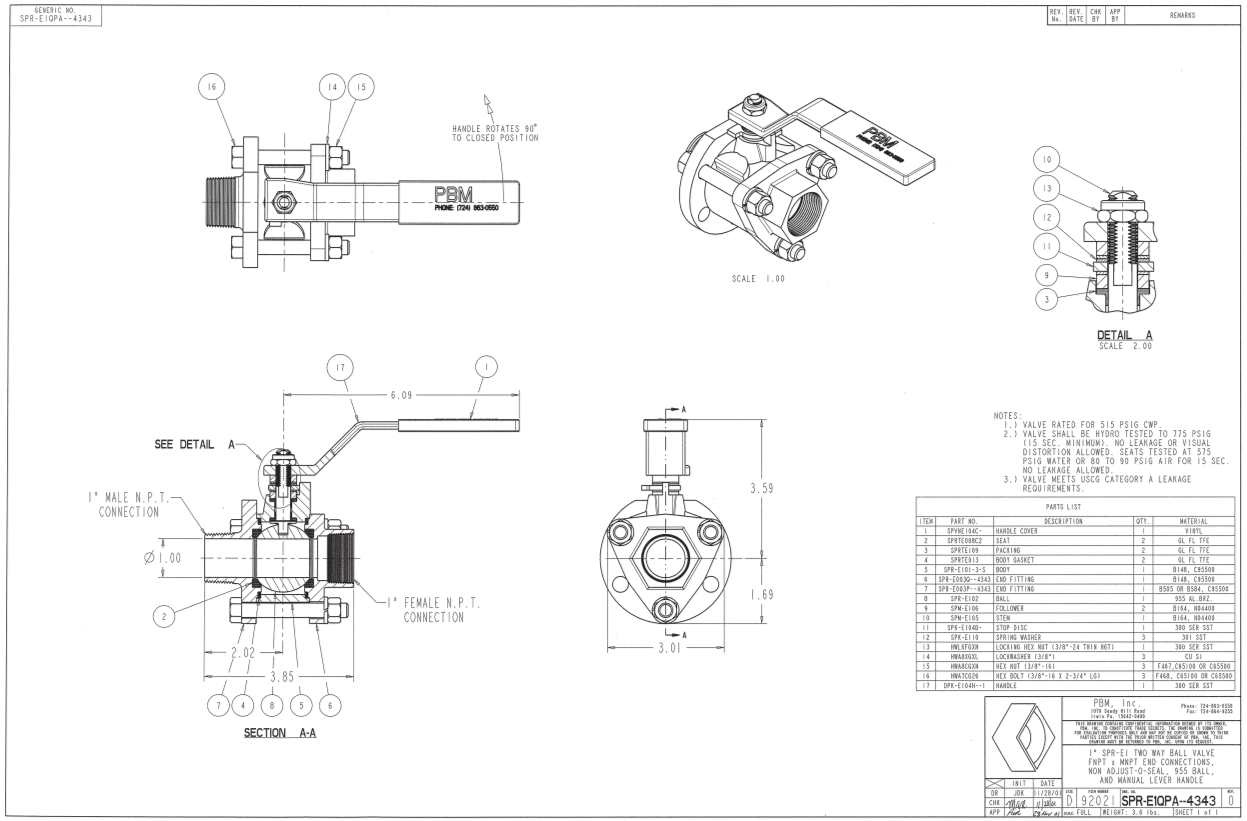

IMI PBM

1070 SANDY HILL ROAD, IRWIN, PA 15642 USA
1-800-967-4PBM
WWW.PBMVALVE.COM
INFO.PBMVALVE@IMI-CRITICAL.COM

IMI Critical Engineering