APPLICATION BRIEF - 17/0805

INDUSTRY: PHARMACEUTICAL

PRODUCT: WFI (WATER FOR INJECTION) STERILE BARRIER CLEAN STEAM BALL VALVE

MEDIA: CLEAN STEAM

IMI PBM Solution:
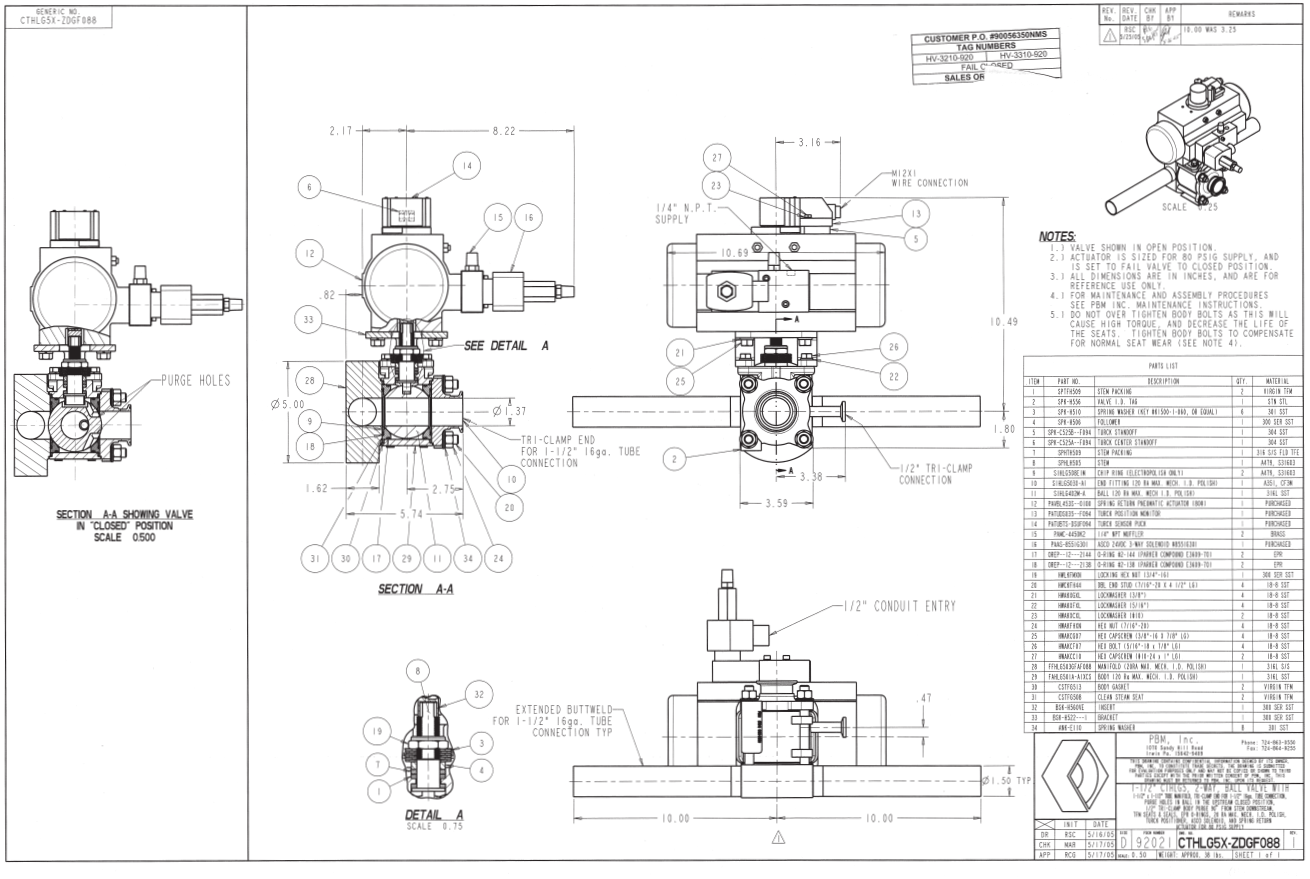
A major pharmaceutical company was looking for a valve to replace the traditional diaphragm valve coupled with a ball valve used as a sterile barrier for a WFI loop. IMI PBM's valve design incorporates adjustable seats (Adjust-O-Seal®) resulting in both an upstream and downstream seal. IMI PBM's ability to seal at the upstream seat provided the ability to provide bubble-tight isolation with zero dead-leg at the WFI header, thus maintaining a sterile barrier. When the system is sterilized, the IMI PBM valve is opened to introduce clean steam into the process loop. A purge port in the valve body drains any resultant condensate that may accumulate during the cleaning cycle. IMI PBM's ability to provide an ultra-sanitary process valve that seals on the upstream seat and performs flawlessly in this application resulted in saving thousands of dollars compared to traditional methods of using a combination diaphragm valve coupled with a ball valve.