APPLICATION BRIEF - 112/0815

INDUSTRY: OIL & GAS

PRODUCT: ANSI STYLE TRANSMITTER ISOLATION VALVE

MEDIA: COKING UNIT

IMI PBM Solution:

Process - Coking Unit Wedge Meter Transmitter Isolation.
Max Temp = 500°F Max Pressure = 588 psig.

Problems:

- Plugging – Heavy crude begins to solidify at 250°F.
- Space – Process requires four each, two-inch instrument taps on each end of a 4 inch wedge meter.
- Reliable Measurement – Measurement as close to the process is critical for reliable process control.

IMI PBM Product Description
CL300, 2" x 2", Full Port, ANSI Style Transmitter Isolation Valve (TIV) with Carbon Graphite Seats and Seals.

Advantages of using IMI PBM Products:

- Minimum Space – IMI PBM TIV saves 20-60% over traditional gate valve configurations. Ability to mount four remote seals on each end of the wedge flow meter for two out of three voting and an additional set of instrument ports. Not possible with traditional gate valve configuration.
- Maximum Reliability – Remote diaphragm seal is mounted very close to the wedge flow path for reliable measurements. Calibration taps on the IMI PBM TIV are close to the remote diaphragm seal for precise calibration.
- Minimum Emissions – Elimination of two flange connections (potential leak paths).
- Minimum Installed Costs – one piece of equipment versus three.

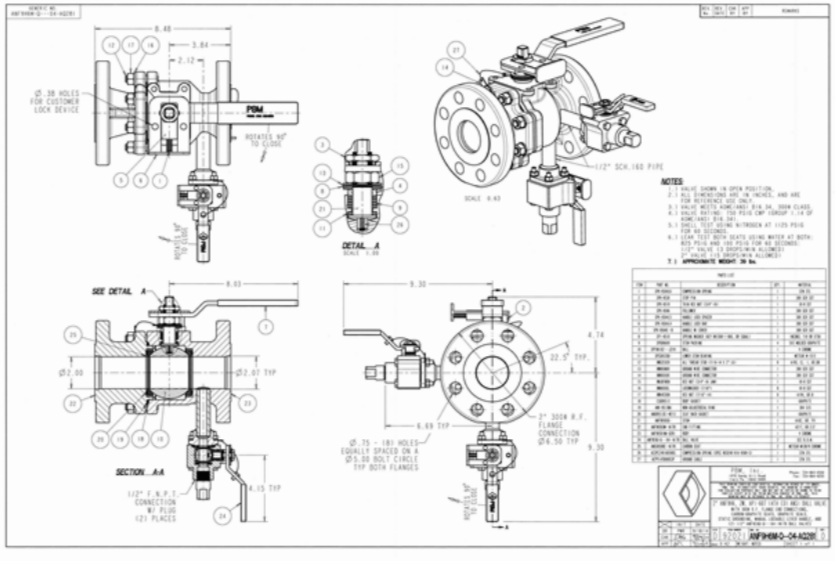

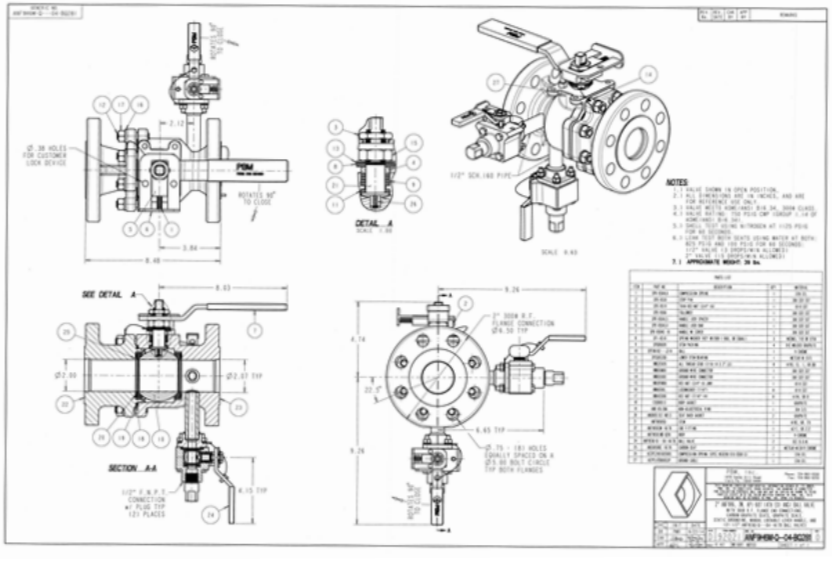

IMI PBM • 1070 SANDY HILL ROAD • IRWIN • PA • 15642 • USA
PBMVALVE.COM • 1.800.967.4PBM • INFO.PBMVALVE@IMI-CRITICAL.COM