APPLICATION BRIEF - 59/1010

INDUSTRY: PETROLEUM

PRODUCT: 3/4-INCH INSTRUMENT VALVE WITH SLOTTED BALL AND CRYOGENIC BONNET

MEDIA: NITROGEN GAS

IMI PBM Solution:

A major petroleum company required a instrument valve to control the flow of nitrogen gas injected into wells to force oil to the surface. The application required a cryogenic design capable of handling extreme temperature and pressure ratings, a slotted ball for flow control, and an automation and controls package that provided the safety and reliability of a tight shut off.

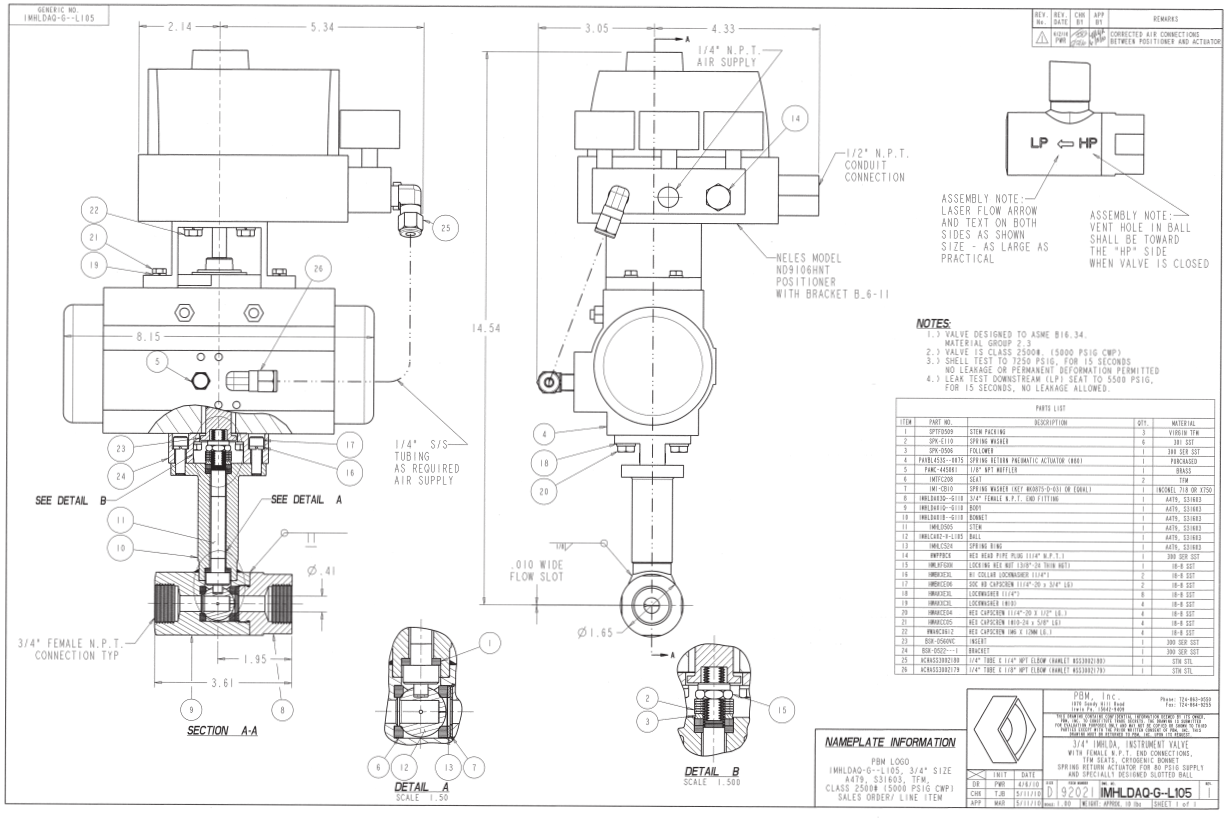

IMI PBM • 1070 SANDY HILL ROAD • IRWIN • PA • 15642 • USA

PBMVALVE.COM • 1.800.967.4PBM • INFO.PBMVALVE@IMI-CRITICAL.COM