APPLICATION BRIEF - 97/0712

INDUSTRY: REFINING

PRODUCT: IMI PBM FABFLEX® MANIFOLDS WITH ANSI VALVES

MEDIA: HYDROCARBONS

IMI PBM Solution:

Major refinery needed a way to reduce space, control the fabrication process, reduce emissions and simplify field installation while providing for redundant level transmitter mounts at the bottom of their H2 Scrubber columns. IMI PBM provided a Fabflex® fabricated manifold to solve the problems. The Fabflex® Manifold is factory fabricated in a controlled manufacturing environment, ensuring high quality welds and allowing for optimal space utilization. By replacing the old system of multiple flanges and individual valves with valves fabricated "into" the manifold, many emission leak paths were eliminated to improve the overall EPA rating of the system. Field installation was simplified into bolting up one flange and installing the transmitters.

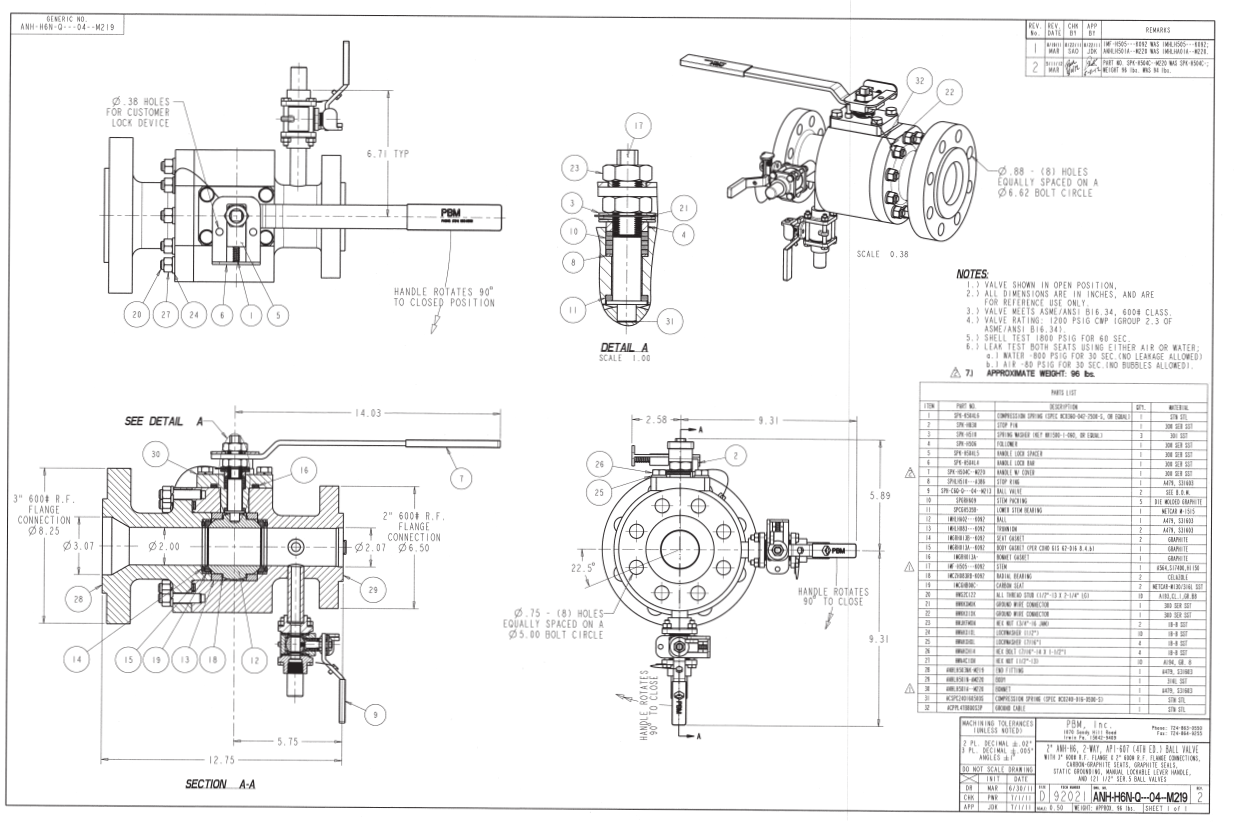

IMI PBM • 1070 SANDY HILL ROAD • IRWIN • PA • 15642 • USA
PBMVALVE.COM • 1.800.967.4PBM • INFO.PBMVALVE@IMI-CRITICAL.COM